Power

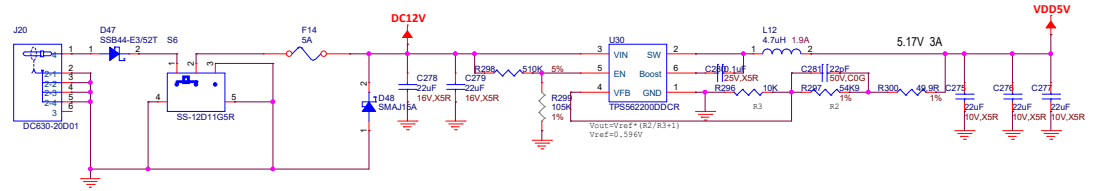

RTC

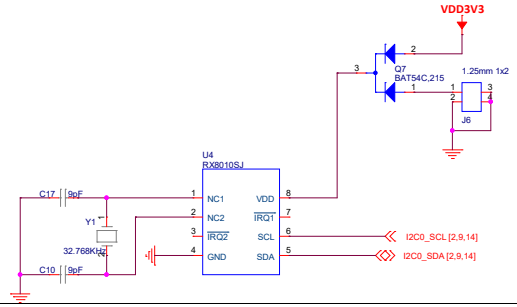

LVDS

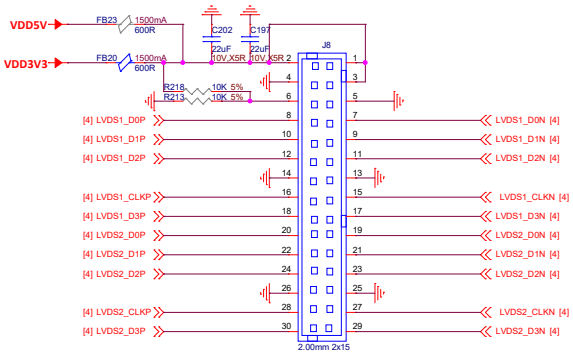

Backlight

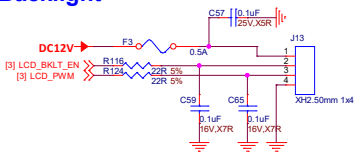

Touch

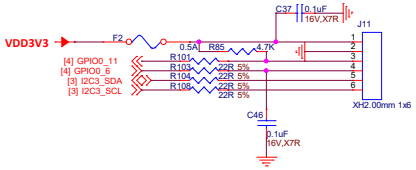

MIPI

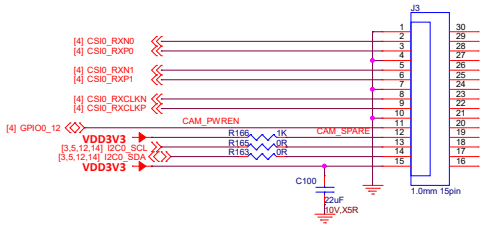

GPMC

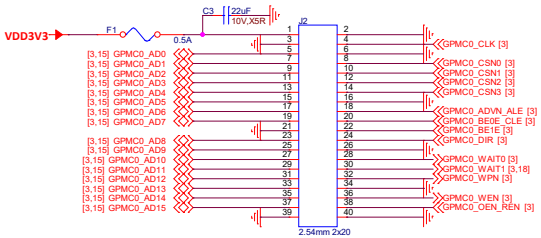

IO

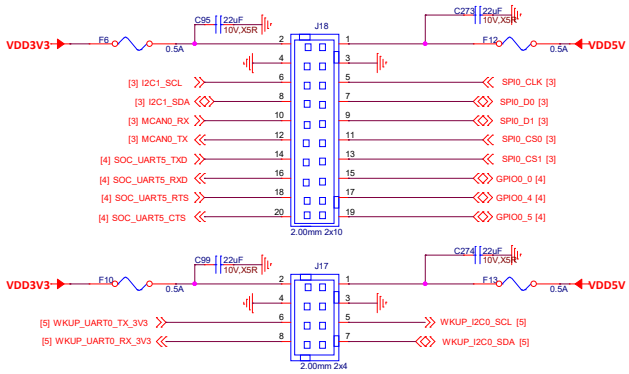

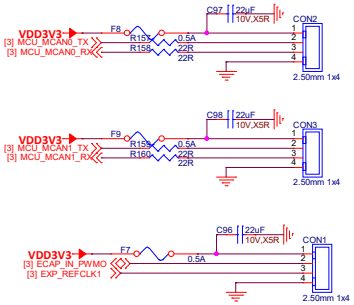
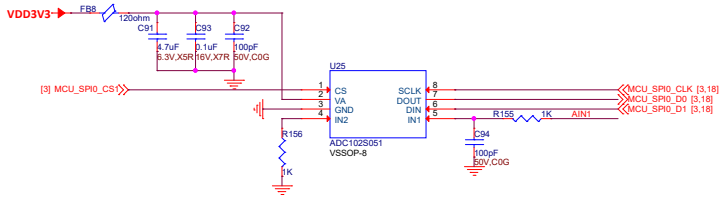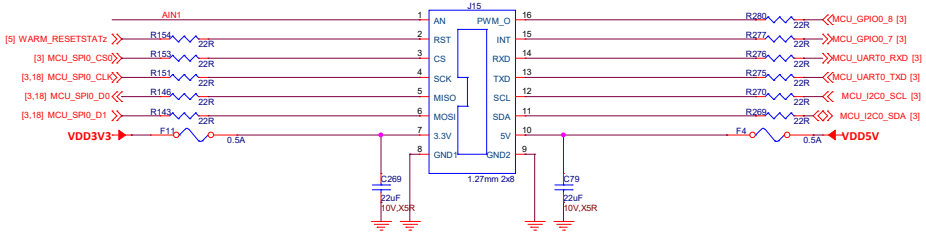
Sensor